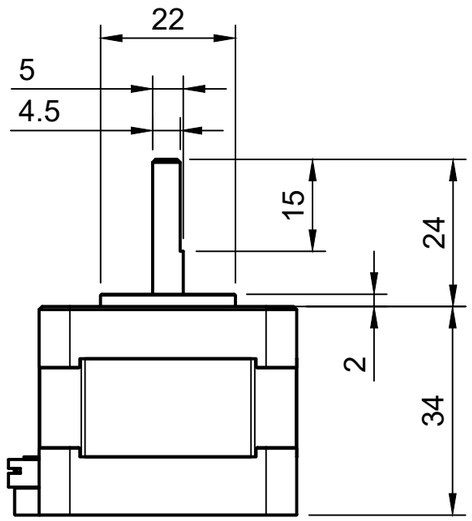

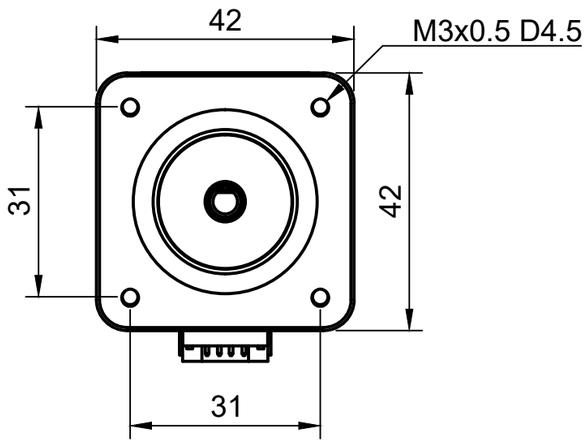

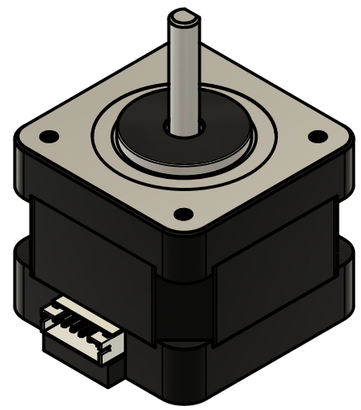

Note: All units in mm	**Product**	2.5Kg-cm (35oz-in) 1.33A 0.9° NEMA17 Hybrid Bipolar Stepper Motor
ooznest	**Product Code**	NEMA17-35-133-09
	Date created	06/10/2025
	Drawing by	Ryan Lock