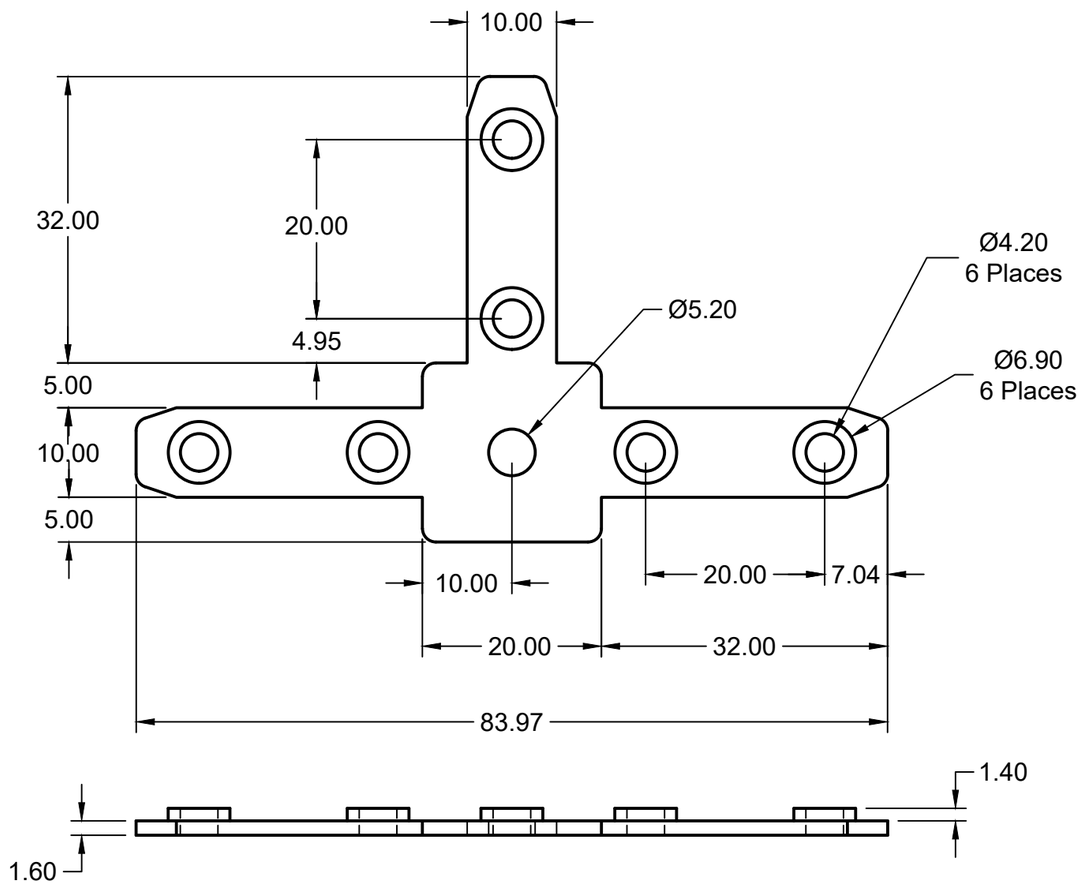

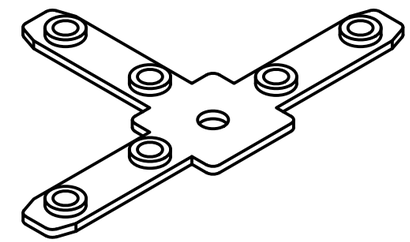

NOTE: All units in mm	**Product**	3 Way Multiway Inner Link Connector
	Product Code	ILC-W-3-F
	Date created	3/8/2024
	Drawing by	Ryan Lock